ST207EB
ST207EC

± 15 kV ESD protected 5 V RS-232 transceiver

Features

- ESD protection for RS-232 i/o pins: ±15 kV human body model
- 230kbps data rate
- Guaranteed slew rate 3 V/ms (min.)
- Operates from a single 5 V power supply
- Packaged in SSO-24 and TSSOP24

SSOP TSSOP

Description

The ST207E is a 5 driver and 3 receiver devices designed for RS-232 and V.28 communications in harsh environments. Each transmitter output and receiver input is protected against ±15 KV electrostatic discharge (ESD) shocks. The drivers and receivers of the ST207E meet all EIA/TIA-232E and CCITT V.28 specifications at data rates up to 120 Kbps, when loaded in accordance with the EIA/TIA-232E specification.

The ST207E operates with four 0.1 µF capacitors. It came in 24-pin SSOP and TSSOP packages.

Table 1. Device summary

Order codes	Temperature range	Package	Packaging
ST207ECPR	0 to 70 °C	SSOP-24 (Tape & Reel)	1350 parts per reel
ST207EBPR	-40 to 85 °C	SSOP-24 (Tape & Reel)	1350 parts per reel
ST207ECTR	0 to 70 °C	TSSOP24 (Tape & Reel)	2500 parts per reel
ST207EBTR	-40 to 85 °C	TSSOP24 (Tape & Reel)	2500 parts per reel

Contents

1 Pin configuration 3

2 Maximum ratings 5

3 Electrical characteristics 6

4 Typical application 8

5 Package mechanical data 9

6 Revision history 14

1 Pin configuration

Figure 1. Pin connections (top view)

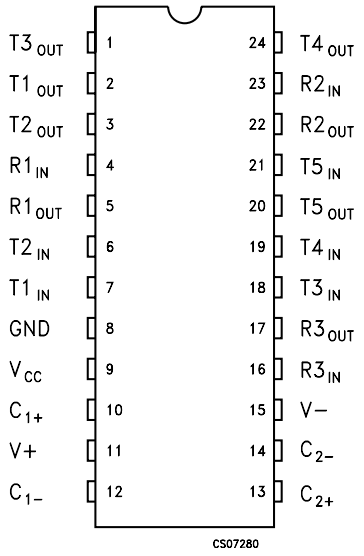

Table 2. Pin description

Pin N°	Symbol	Note
1	$T3_{OUT}$	RS-232 driver output
2	$T1_{OUT}$	RS-232 driver output
3	$T2_{OUT}$	RS-232 driver output
4	$R1_{IN}$	RS-232 receiver input
5	$R1_{OUT}$	TTL/CMOS receiver output
6	$T2_{IN}$	TTL/CMOS driver input internal pull-up to V_{CC}
7	$T1_{IN}$	TTL/CMOS driver input internal pull-up to V_{CC}
8	GND	Ground
9	V_{CC}	4.75V to 5.25V supply voltage
10	C_{1+}	Terminal for positive charge-pump capacitor
11	V_{+}	$2V_{CC}$ generated by the charge-pump
12	C_{1-}	Terminal for negative charge-pump capacitor
13	C_{2+}	Terminal for positive charge-pump capacitor
14	C_{2-}	Terminal for negative charge-pump capacitor
15	V_{-}	$-2V_{CC}$ generated by the charge-pump
16	$R3_{IN}$	RS-232 receiver input
17	$R3_{OUT}$	TTL/CMOS receiver output

Table 2. Pin description

Pin N°	Symbol	Note
18	$T3_{IN}$	TTL/CMOS driver input internal pull-up to V_{CC}
19	$T4_{IN}$	TTL/CMOS driver input internal pull-up to V_{CC}
20	$T5_{OUT}$	RS-232 driver output
21	$T5_{IN}$	TTL/CMOS driver input internal pull-up to V_{CC}
22	$R2_{OUT}$	TTL/CMOS receiver output
23	$R2_{IN}$	RS-232 receiver input
24	$T4_{OUT}$	RS-232 driver output

2 Maximum ratings

Table 3. Absolute maximum ratings

Symbol	Parameter	Value	Unit
V_{CC}	Supply voltage	-0.3 to 6	V
V+	Extra positive voltage	(V_{CC} - 0.3) to 14	V
V-	Extra negative voltage	-14 to 0.3	V
T_{IN}	Transmitter input voltage range	-0.3 to (V_{CC} + 0.3)	V
R_{IN}	Receiver input voltage range	±30	V
T_{OUT}	Transmitter output voltage range	(V_- - 0.3) to (V_+ + 0.3)	V
R_{OUT}	Receiver output voltage range	-0.3 to (V_{CC} + 0.3)	V
T_{SHORT}	Short circuit duration on t_{OUT}	Continuous	
T_{STG}	Storage temperature range	-65 to 150	°C

Note: Absolute Maximum Ratings are those values beyond which damage to the device may occur. Functional operation under these condition is not implied. V+ and V- can have a maximum magnitude of +7V, but their absolute addition can not exceed 13 V.

3 Electrical characteristics

Table 4. ESD Performance: transmitter outputs, receiver inputs

Symbol	Parameter	Test condition	Min.	Typ.	Max.	Unit
ESD	ESD protection voltage	Human body model	±15			KV
ESD	ESD protection voltage	IEC-1000-4-2 Contact discharge	±8			KV

Table 5. Electrical characteristics
(C_1 - C_4 = 0.1 µF, V_{CC} = 5 V ± 5%, T_A = min. to max., unless otherwise specified. Typical values are referred to T_A = 25°C).

Symbol	Parameter	Test condition	Min.	Typ.	Max.	Unit
I_{SUPPLY}	V_{CC} power supply current	No Load, T_A = 25°C		2	5	mA

Table 6. Transmitter electrical characteristics
(C_1 - C_4 = 0.1 µF, V_{CC} = 5V ± 5%, T_A = min. to max., unless otherwise specified. Typical values are referred to T_A = 25°C).

Symbol	Parameter	Test condition	Min.	Typ.	Max.	Unit
V_{TOUT}	Output voltage swing	All Driver loaded with 3KΩ to GND	±5	±8.5		V
R_{OUT}	Transmitter output resistance	V_{CC} = V+ = V- = 0V V_{OUT} = ±2V	300			Ω
I_{SC}	Output short circuit current			±18	±60	mA
I_{IL}	Input pull-up current	T_{IN} = 0V		15	200	µA
V_{TIL}	Input logic threshold low				0.8	V
V_{TIH}	Input logic threshold high		2			V

Table 7. Receiver electrical characteristics
(C_1 - C_4 = 0.1 µF, V_{CC} = 5 V ± 5%, T_A = min. to max., unless otherwise specified. Typical values are referred to T_A = 25°C).

Symbol	Parameter	Test condition	Min.	Typ.	Max.	Unit
V_{RIN}	Receiver input voltage operating range		-30		30	V
V_{RIL}	Input threshold low	T_A = 25°C V_{CC} = 5V	0.8	1.2		V
V_{RIH}	Input threshold high	T_A = 25°C V_{CC} = 5V		1.7	2.4	V
V_{RIHYS}	Input hysteresis	V_{CC} = 5V, no hysteresis in shutdown	0.2	0.5	1	V
R_{RIN}	Input resistance	T_A = 25°C V_{CC} = 5V	3	5	7	KΩ
V_{OL}	Output voltage low				0.4	V
V_{OH}	Output voltage high	I_{OUT} = -1mA	3.5	V_{CC}-0.4		V

Table 8. Timing characteristics

(C_1 - C_4 = 0.1 µF, V_{CC} = 5V ± 5%, T_A = min. to max., unless otherwise specified. Typical values are referred to T_A = 25°C).

Symbol	Parameter	Test condition	Min.	Typ.	Max.	Unit
D_R	Maximum data rate	R_L = 3kΩ to 7kΩ C_L= 50pF to 1000pF one transmitter switching	150	240		Kbps
		R_L = 3kΩ to 7kΩ C_L= 50pF to 150pF one transmitter switching	230	300		Kbps
t_{PHLR} t_{PLHR}	Receiver propagation delay	All drivers loaded with 3KΩ to GND		0.2	10	µs
t_{PHLT} t_{PLHT}	Transmitter propagation delay	R_L = 3kΩ C_L= 2500pF All transmitter loaded		2	3	µs
SR	Transition-region slew rate	T_A = 25°C R_L = 3 to 7 kΩ V_{CC} = 5 V C_L = 50pF to 1000pF measured from +3V to -3V or -3V to +3V	3	7	30	V/µs

4 Typical application

Figure 2. Application circuit

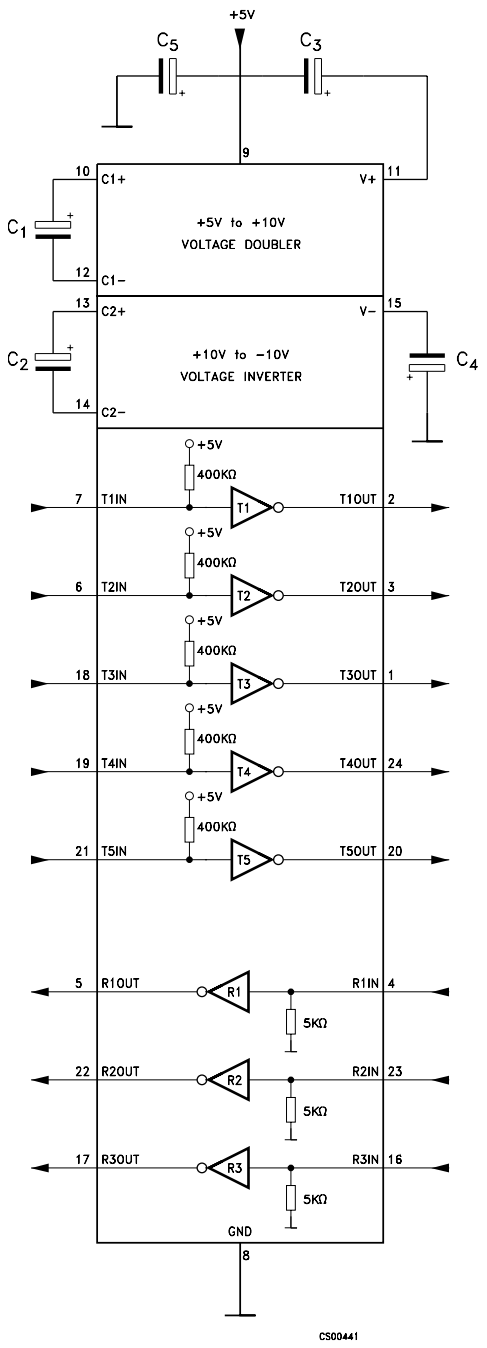

Table 9. Capacitance value (µF)

C1	C2	C3	C4	C5
0.1	0.1	0.1	0.1	0.1

5 Package mechanical data

In order to meet environmental requirements, ST offers these devices in ECOPACK® packages. These packages have a Lead-free second level interconnect. The category of second Level Interconnect is marked on the package and on the inner box label, in compliance with JEDEC Standard JESD97. The maximum ratings related to soldering conditions are also marked on the inner box label. ECOPACK is an ST trademark. ECOPACK specifications are available at: www.st.com.

SSOP24 mechanical data

Dim.	mm.			inch.		
	Min.	Typ.	Max.	Min.	Typ.	Max.
A			2			0.079
A1	0.05			0.002		
A2	1.65	1.75	1.85	0.065	0.069	0.073
b	0.22		0.38	0.009		0.015
c	0.09		0.25	0.004		0.010
D	7.9	8.2	8.5	0.311	0.323	0.335
E	7.4	7.8	8.2	0.291	0.307	0.323
E1	5.00	5.3	5.6	0.197	0.209	0.220
e		0.65 BSC			0.0256 BSC	
K	0°		8°	0°		8°
L	0.55	0.75	0.95	0.022	0.030	0.037

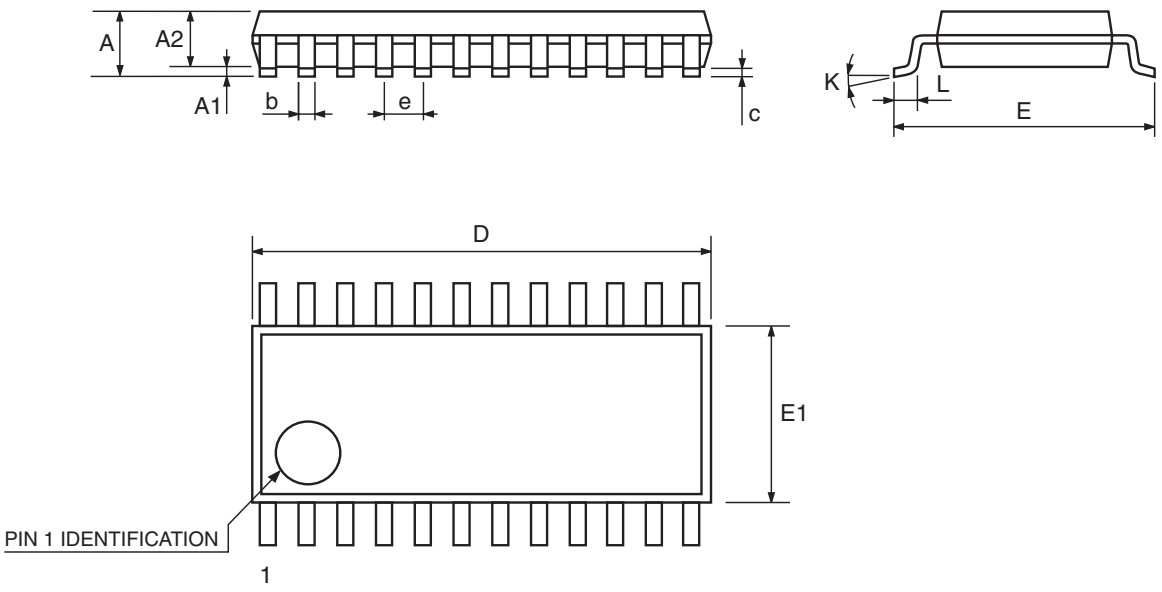

0053237/C

TSSOP24 mechanical data

Dim.	mm.			inch.		
	Min.	Typ.	Max.	Min.	Typ.	Max.
A			1.1			0.043
A1	0.05		0.15	0.002		0.006
A2		0.9			0.035	
b	0.19		0.30	0.0075		0.0118
c	0.09		0.20	0.0035		0.0079
D	7.7		7.9	0.303		0.311
E	4.3		4.5	0.169		0.177
e		0.65 BSC			0.0256 BSC	
H	6.25		6.5	0.246		0.256
K	0°		8°	0°		8°
L	0.50		0.70	0.020		0.028

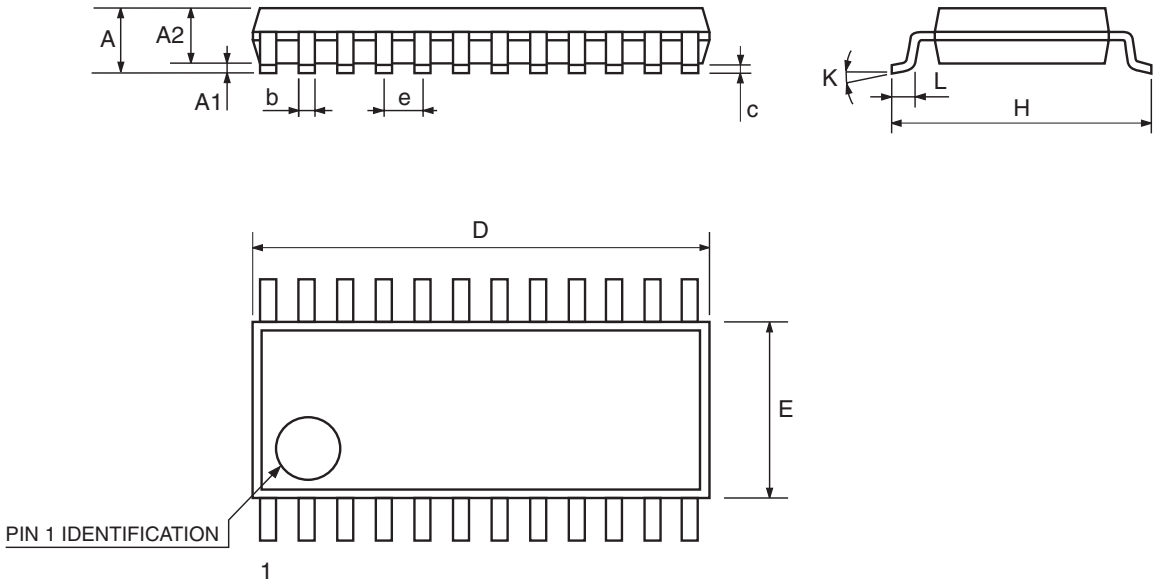

7047476B

Tape & reel SSOP24 mechanical data

Dim.	mm.			inch.		
	Min.	Typ.	Max.	Min.	Typ.	Max.
A			330			12.992
C	12.8		13.2	0.504		0.519
D	20.2			0.795		
N	60			2.362		
T			22.4			0.882
Ao	8.4		8.6	0.331		0.339
Bo	8.7		8.9	0.343		0.351
Ko	2.9		3.1	0.114		0.122
Po	3.9		4.1	0.153		0.161
P	11.9		12.1	0.468		0.476

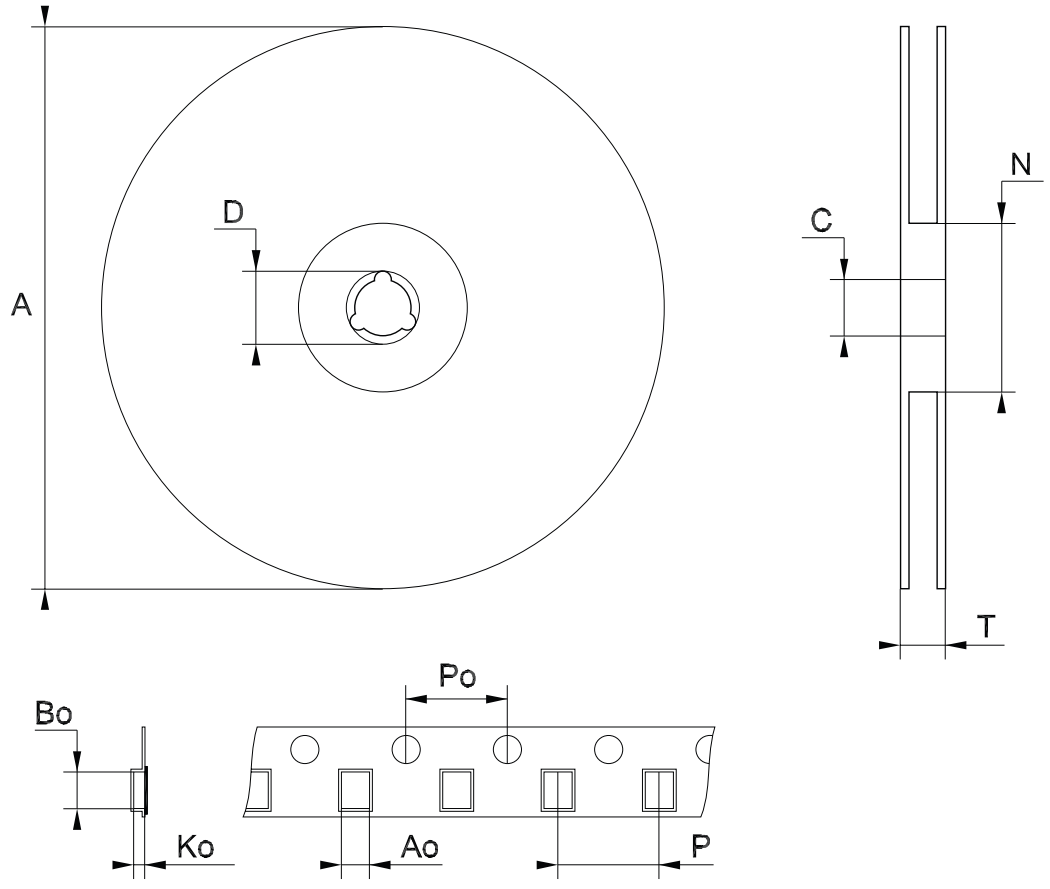

Note: Drawing not in scale

Tape & reel TSSOP24 mechanical data

Dim.	mm.			inch.		
	Min.	Typ.	Max.	Min.	Typ.	Max.
A			330			12.992
C	12.8		13.2	0.504		0.519
D	20.2			0.795		
N	60			2.362		
T			22.4			0.882
Ao	6.8		7	0.268		0.276
Bo	8.2		8.4	0.323		0.331
Ko	1.7		1.9	0.067		0.075
Po	3.9		4.1	0.153		0.161
P	11.9		12.1	0.468		0.476

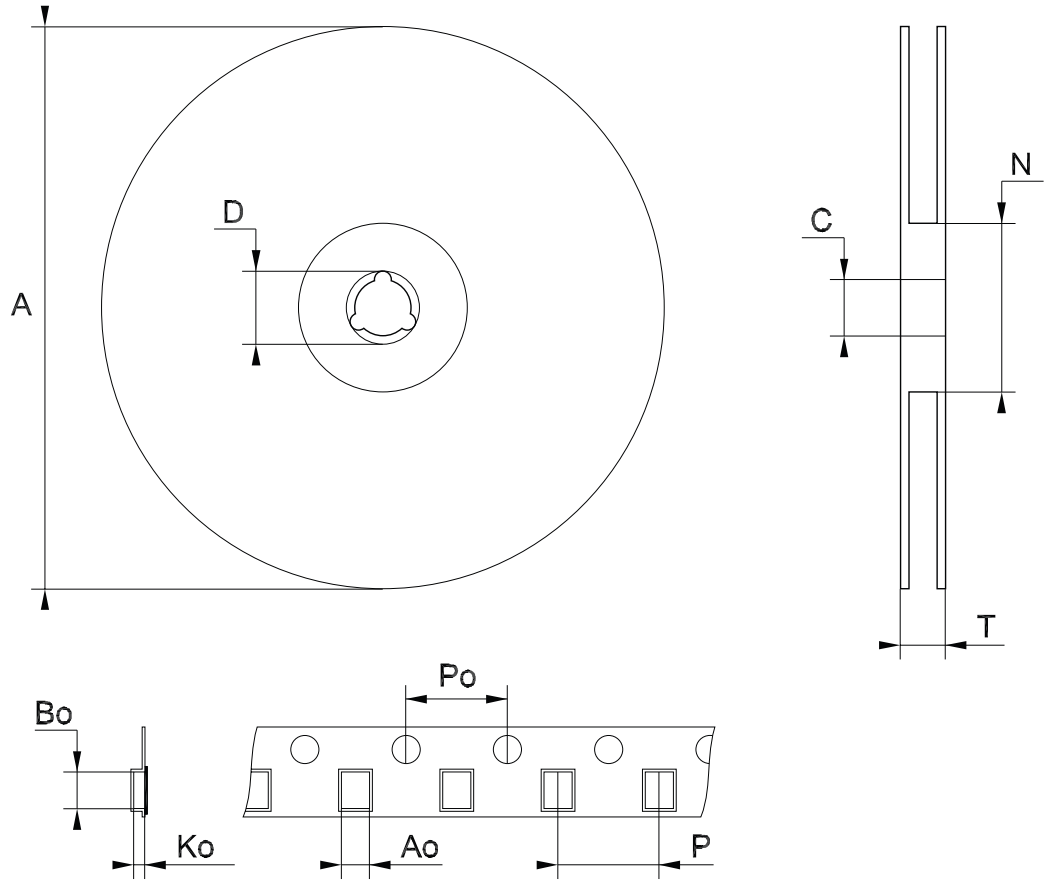

Note: Drawing not in scale

6 Revision history

Table 10. Revision history

Date	Revision	Changes
09-Feb-2005	13	Mistake on Table 1.
14-Mar-2006	14	Order codes has been updated and new template.
22-Aug-2007	15	Added *Table 1.* in cover page.

Please Read Carefully:

Information in this document is provided solely in connection with ST products. STMicroelectronics NV and its subsidiaries (“ST”) reserve the right to make changes, corrections, modifications or improvements, to this document, and the products and services described herein at any time, without notice.

All ST products are sold pursuant to ST’s terms and conditions of sale.

Purchasers are solely responsible for the choice, selection and use of the ST products and services described herein, and ST assumes no liability whatsoever relating to the choice, selection or use of the ST products and services described herein.

No license, express or implied, by estoppel or otherwise, to any intellectual property rights is granted under this document. If any part of this document refers to any third party products or services it shall not be deemed a license grant by ST for the use of such third party products or services, or any intellectual property contained therein or considered as a warranty covering the use in any manner whatsoever of such third party products or services or any intellectual property contained therein.

UNLESS OTHERWISE SET FORTH IN ST’S TERMS AND CONDITIONS OF SALE ST DISCLAIMS ANY EXPRESS OR IMPLIED WARRANTY WITH RESPECT TO THE USE AND/OR SALE OF ST PRODUCTS INCLUDING WITHOUT LIMITATION IMPLIED WARRANTIES OF MERCHANTABILITY, FITNESS FOR A PARTICULAR PURPOSE (AND THEIR EQUIVALENTS UNDER THE LAWS OF ANY JURISDICTION), OR INFRINGEMENT OF ANY PATENT, COPYRIGHT OR OTHER INTELLECTUAL PROPERTY RIGHT.

UNLESS EXPRESSLY APPROVED IN WRITING BY AN AUTHORIZED ST REPRESENTATIVE, ST PRODUCTS ARE NOT RECOMMENDED, AUTHORIZED OR WARRANTED FOR USE IN MILITARY, AIR CRAFT, SPACE, LIFE SAVING, OR LIFE SUSTAINING APPLICATIONS, NOR IN PRODUCTS OR SYSTEMS WHERE FAILURE OR MALFUNCTION MAY RESULT IN PERSONAL INJURY, DEATH, OR SEVERE PROPERTY OR ENVIRONMENTAL DAMAGE. ST PRODUCTS WHICH ARE NOT SPECIFIED AS "AUTOMOTIVE GRADE" MAY ONLY BE USED IN AUTOMOTIVE APPLICATIONS AT USER’S OWN RISK.

Resale of ST products with provisions different from the statements and/or technical features set forth in this document shall immediately void any warranty granted by ST for the ST product or service described herein and shall not create or extend in any manner whatsoever, any liability of ST.

ST and the ST logo are trademarks or registered trademarks of ST in various countries.

Information in this document supersedes and replaces all information previously supplied.

The ST logo is a registered trademark of STMicroelectronics. All other names are the property of their respective owners.

© 2007 STMicroelectronics - All rights reserved

STMicroelectronics group of companies

Australia - Belgium - Brazil - Canada - China - Czech Republic - Finland - France - Germany - Hong Kong - India - Israel - Italy - Japan - Malaysia - Malta - Morocco - Singapore - Spain - Sweden - Switzerland - United Kingdom - United States of America

www.st.com